

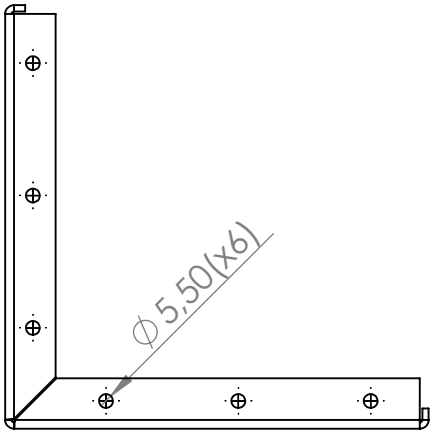

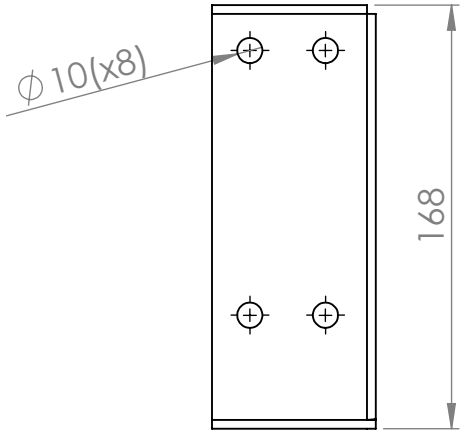

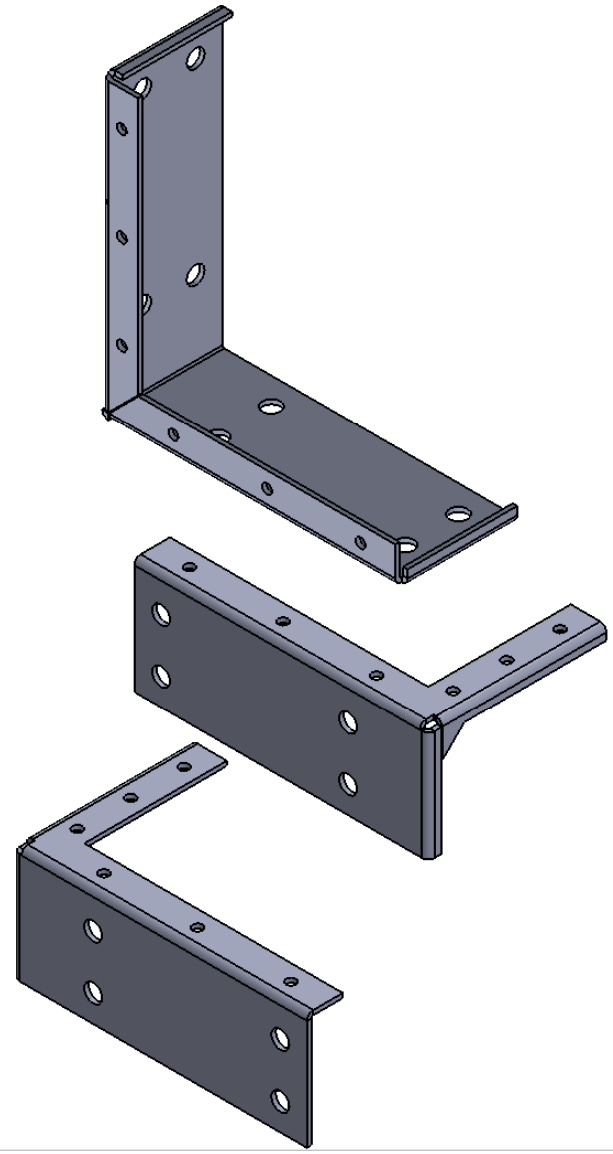

Deliver with:
8 pcs M6x16 MF6S
8 pcs M6x35 MF6S

Boom INTERIOR™

Material	Art.nr.	Blad	
	35020	1/1	A4

Skala	Sign.	Benämning	Rev
1:3	Boom INTERIOR	Desk mount for Serie P and Oberon Two screens	
	Datum 16-01-12		