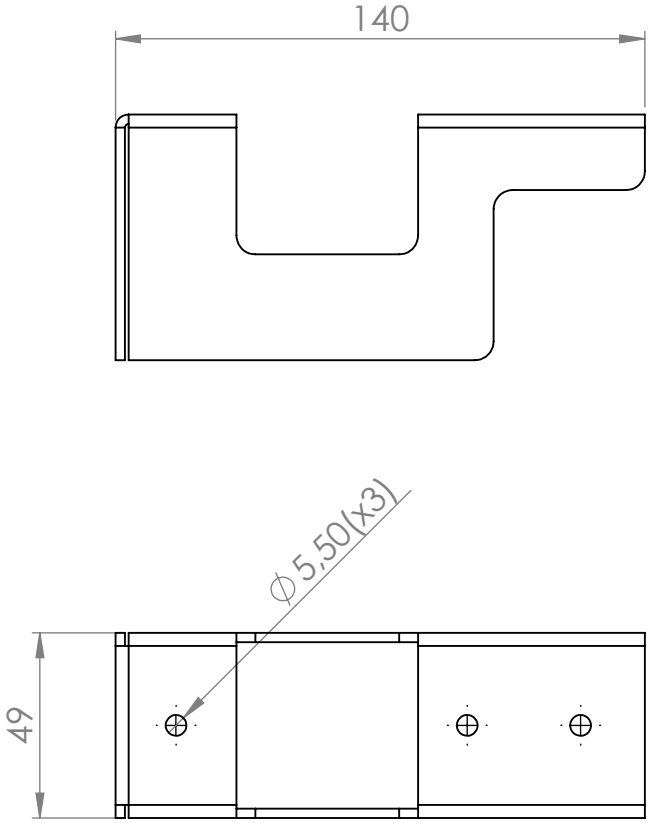

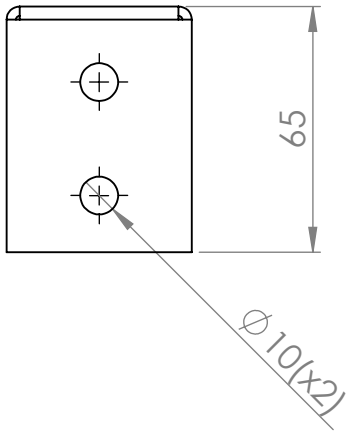

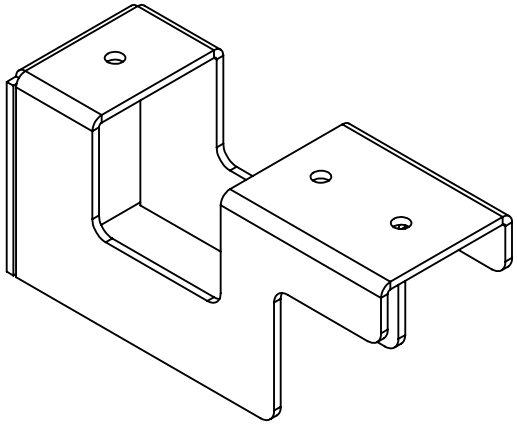

38010 One pair
38030 3pcs

Deliver with:
M6x16 MF6S 2pcs/clamp
M6x35 MF6S 2pcs/clamp
SPAX 5x20 3pcs/clamp

Boom INTERIOR™

Material	Art.nr.	Blad	
	38010, 38030	1/1	A4

Skala	Sign.	Benämning	Rev
1:2	Boom INTERIOR	Desk mount for Serie One	A
	Datum 16-05-01		